DL2400

DEADLATCH LOCK

Installation Instructions

A Dimensions

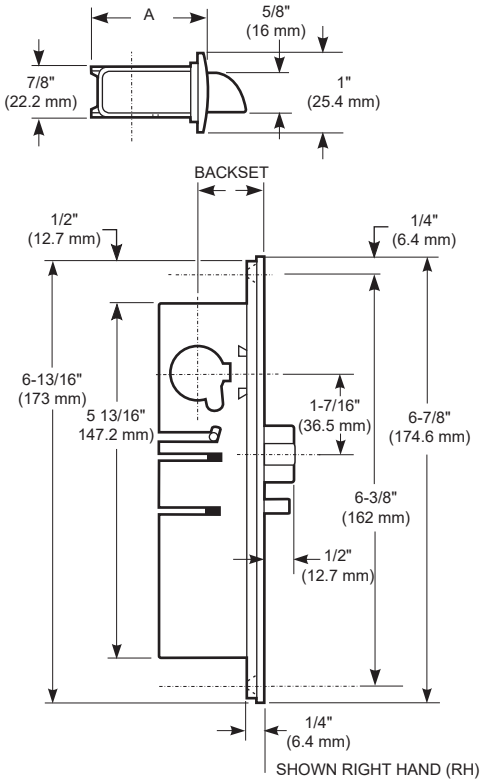

How Backset is measured

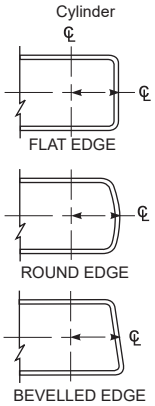

BACKSET	DIMENSION A
31/32" (24.6 mm)	1-5/8" (41.3 mm)
1-1/8" (28.6 mm)	1-25/32" (45.2 mm)

CYLINDER WITH CAM **A**

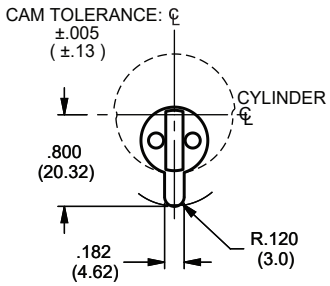

Lock accepts standard 1-5/32" (29.4 mm) diameter cylinders with Cam A (Adams Rite)

Cylinder length depends on door thickness and cylinder collar height.

Faceplate

1 X 6-7/8"
25.4 X 174.6 mm

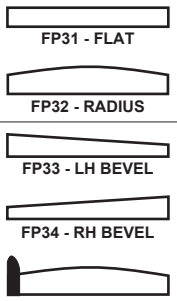

FP31 - FLAT

FP32 - RADIUS

FP33 - LH BEVEL

FP34 - RH BEVEL

RADIUS W/ WEATHERSTRIP

FP35 - LH
FP36 - RH

1 Door Stile & Frame Preparation

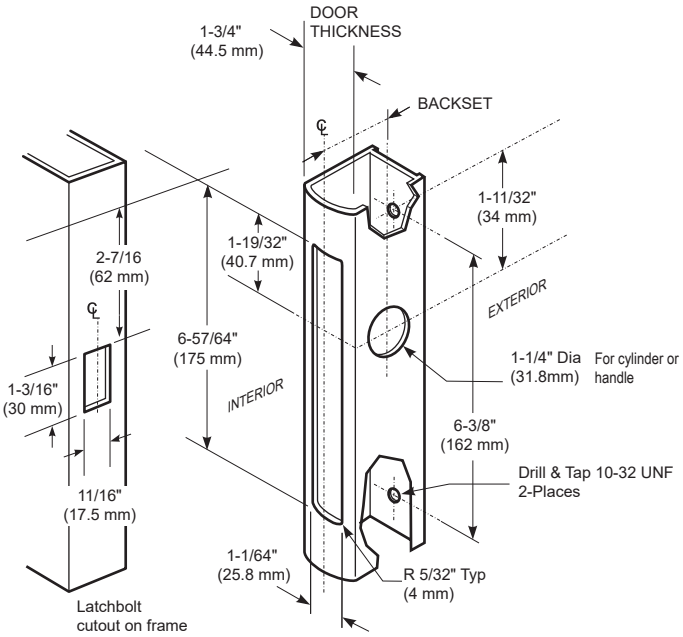

NOTE: Indicated door preparation is for a standard aluminum door thickness of 1-3/4" (44.5 mm). Other door thicknesses, doors with thermal cladding or doors with a bevelled edge will require special door preparation.

2 Lock Installation

A. DEADLATCH
Install deadlatch lock and secure with machine screws.

B. CYLINDER
Install the appropriate cylinder and secure using set screws.

C. HANDLE
Install the desired handle or operator as per its instructions.

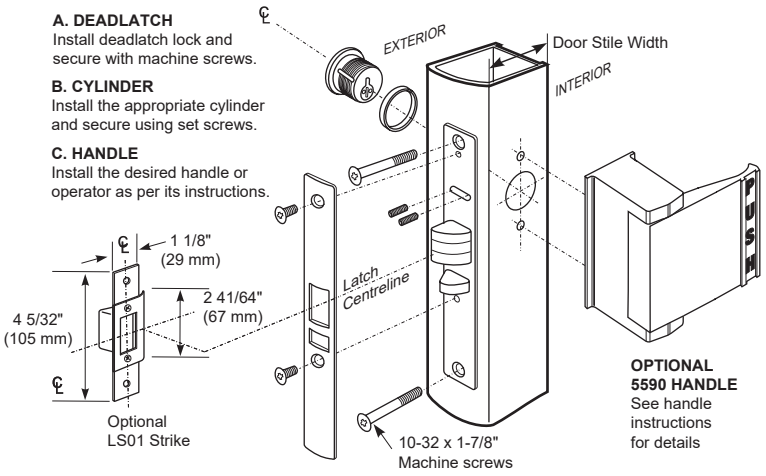

OPTIONAL
5590 HANDLE
See handle instructions for details

NOTE: Depending on door stile width, longer or other type mounting screws may be required. Longer mounting screws to be determined and supplied by installer. Other mounting methods can be determined and applied by door manufacturer or installer (Detail deadlatch dimensions are available on request).

TO CHANGE DEADLATCH HANDING
See page 2.

B Latch Dogging

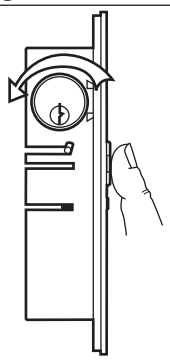

While bolt is fully retracted turn the key in the direction opposite to the door edge to retain the latch retracted, allowing the door to be unlatched.

Related Hardware & Accessories

SOLD SEPARATELY

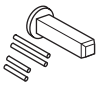

5590SPK Extension Kit
For doors thicker than 2" (51 mm) including thermal cladding.

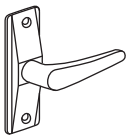

0112
Lever handle with 0112PLUG

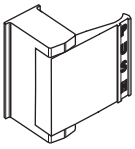

5590
Push/pull handle with 0112PLUG

Cylinder Rings

Cylinders

0112PLUG
Cam plug

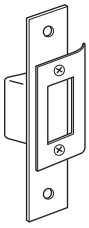

LS01
Optional strike
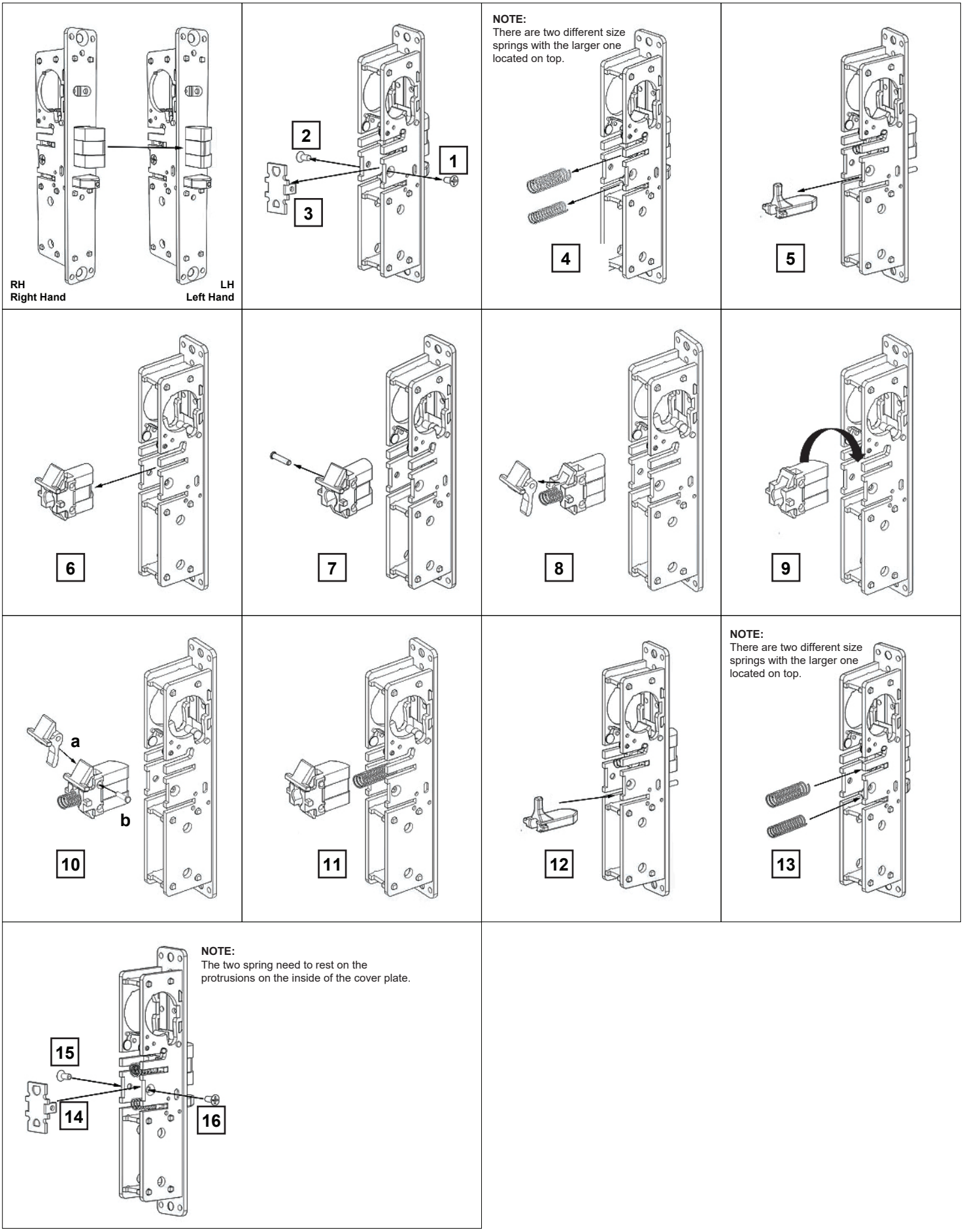
C Change Handing